GDS ENGINEERING

# ASGD-SP

## Automatic aspirating gas detector
## User manual



Installation, Operation, Calibration, and Maintenance

ASGD-3000 / ASGD-3200 / ASGD-3200-R

GDS ENG Co., Ltd.

gdseng.co.kr 031-731-0218

2026.11 · Rev.4

# User Manual Guide

## Applicable Products

ASGD-SP is an explosion-proof gas detector that uses an internal pump to draw in external gases and measure their concentration. It is configured for detecting flammable gases, toxic gases, and oxygen, depending on the installed sensor.

This manual covers FND-display configurations in the ASGD-3000 / 3200 / 3200-R family. Specifications and menus vary with the sensor, mechanical assembly, communication and firmware. Check the delivered nameplate, drawings and communication specifications.


| Index | Page |
|---|---|
| Safety Instructions · Product Specifications | 03-04 |
| Operation Flow · Components · Display | 05-07 |
| Installation · Grounding · Power · Wiring · CAD Drawings | 08-14 |
| Operation · Alarm · Calibration · Basic Settings | 15-20 |
| Time · Record Menu · Network · Communication | 21-23 |
| Regular Inspection · Troubleshooting · Error Codes | 24-26 |
| Nameplate · Maintenance · Field Verification Records | 27-29 |
| Technical Support Contact | 30 |


Integrated revision on 2026.11: CAD exterior dimensions and assembly cross-sectional views from the company's original documents have been added. The menu and communication items are applied to the delivery configuration that supports the corresponding function.

# Safety Instructions Before Use

## Do not open the cover while energized.

Do not open the cover if there is a risk of explosive gas atmosphere. Before opening, wiring, or inspection, disconnect the power and verify the safety of the work area.

## Items to verify before installation

Verify that the hazard area classification, explosion protection structure and equipment rating, temperature rating, electrical specifications, ambient conditions, and wiring method are compatible with the product.

## Worker and Work Range

Assembly, disassembly, inspection, and calibration must be performed by trained personnel with the approval of the responsible person. Refer to the manufacturer for repair of components that affect explosion protection performance.

## Precautions when changing settings

Before calibration, output testing, and initialization, verify the impact on the connected receiver and alarm equipment. After initialization, the measurement range, calibration, alarm, and output settings must be reconfirmed.

The nameplate markings in this manual follow the physical ASGD-SP nameplate. Check the product nameplate and certification documents for installation requirements and any special conditions of use.

# Product Specifications

| Item | Specifications |
|---|---|
| Safety-certified type | ASGD-SP |
| Target / Method of Detection | Combustible gases / toxic gases / oxygen; automatic aspiration |
| Sensor technology | Electrochemical / semiconductor / catalytic combustion / infrared<br>Selected for the target gas and delivered specification |
| Measurement Range / Display | Settings for each gas / 4-digit FND display |
| Power Source | DC 24V or PoE configuration |
| DC 24V input specifications | 18–31V DC / Maximum 200mA |
| Communication / Output | 4–20mA or Modbus TCP, selectable<br>Modbus TCP configurations use PoE power |
| Additional Interfaces | RS-485, Alarm Relay: Supported in the corresponding configuration |
| Analog Load | Maximum Load: 4–20mA, 500Ω |
| Accuracy / Zero Point Deviation | ±3% of F.S. / ±2% of F.S. |
| Relay Contacts | SPDT / AC 250V, 1A |
| Sampling tube | 1/4 inch OD Tube |
| Explosion-Proof Marking | Ex db IIC T6 Gb |
| Wiring entry | 3/4 PF (physical nameplate) |
| Installation Method / Appearance | Wall Mounting / Refer to dimensions and original drawings on pages 12–14 for the corresponding configuration |
| Humidity | 5–99% RH, No Condensation |

F.S.: full-scale measurement value. Existing documents specify -20~+40°C as the explosion-protection ambient temperature; the actual product certificate takes precedence. General operating temperatures differ between documents: verify the delivered specification.

# Gas Detection and Signal Flow

## Sample Gas Flow

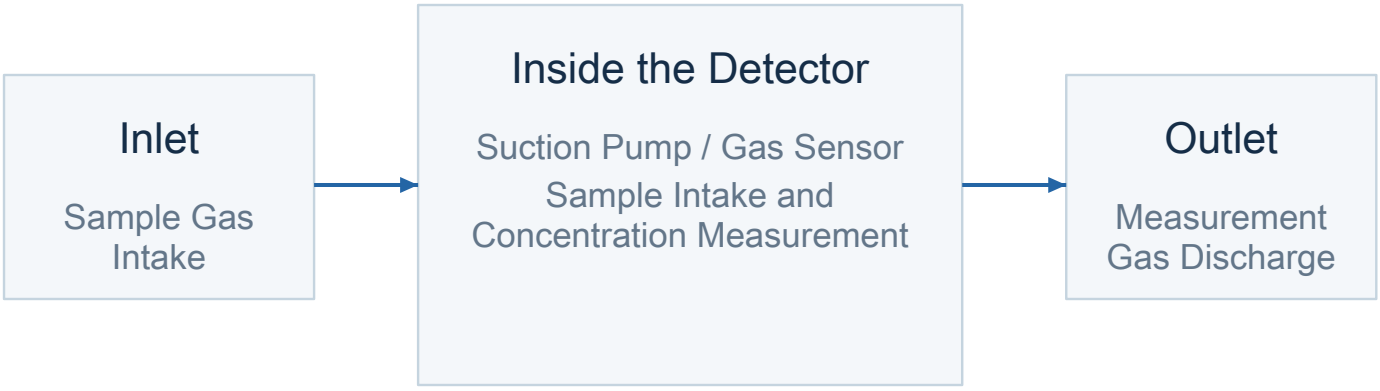


The built-in pump sucks in external gas, and the installed sensor measures the gas concentration.

## Signal Transmission

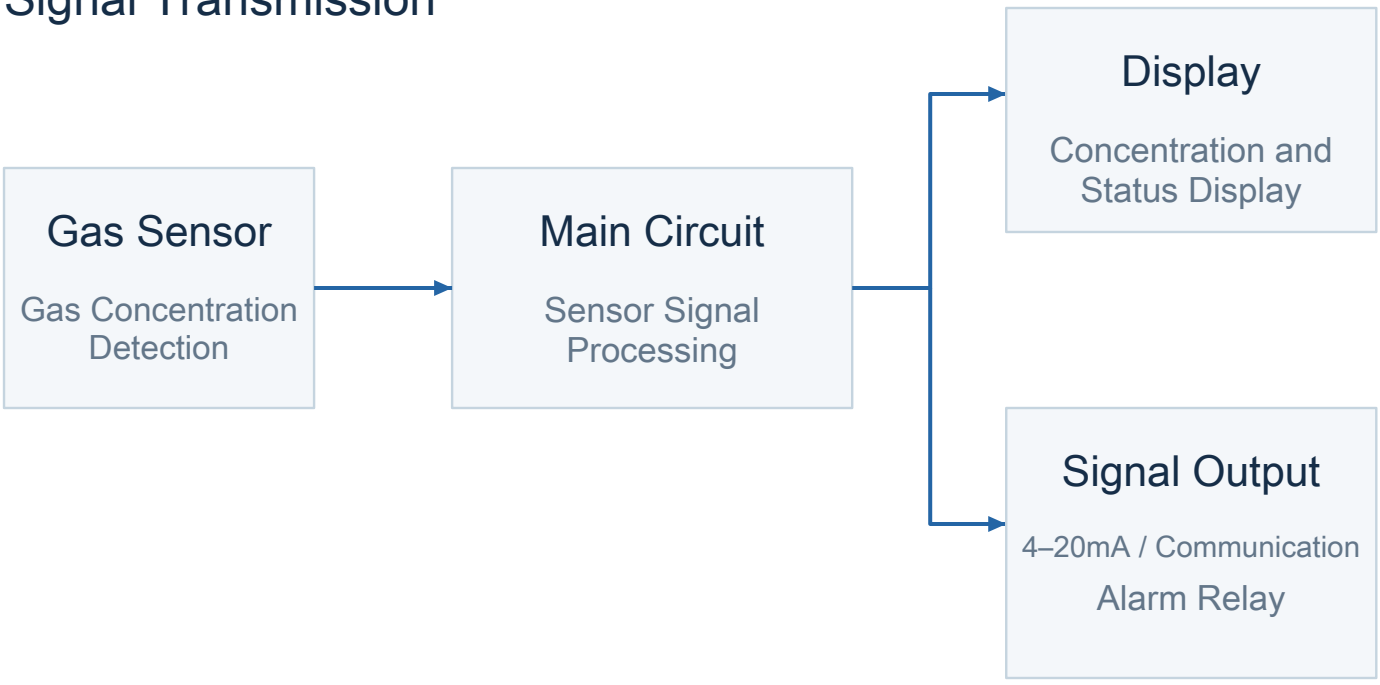


This is a concept diagram explaining the function flow. Actual component layout and supported interfaces may vary depending on the delivered configuration.

# Main Components

| Components | Function |
|---|---|
| Case/Cover | Protect sensor, pump, and PCB from external impact and environment |
| Sensor Holder | Delivers the inhaled gas to the sensor and supplies the measurement signal to the circuit |
| Cover Fixing Screw | Fixes the case and cover |
| Terminal Block | Connect DC 24V power input and 4–20mA output |
| Inlet / Outlet | Sample gas inlet/outlet; tubing with 1/4-inch outside diameter |
| Tempered Glass | Verify concentration and status of the display |
| Display | Concentration, set value, power, fault, alarm, and flow rate status display |
| Main PCB | Sensor signal processing and output of current, communication, and relay signals |
| Display PCB / Pump circuit | Display and setting functions, and operation of the suction pump |
| Fixing ring | Secures the tempered glass to the cover |
| Internal grounding | Grounding to reduce the influence of external noise and electric field |
| Insulating plate | Fixing and insulation of internal components such as PCB and pump |
| Suction pump | Continuously supplying external gas to the sensor |
| PCB support | Fixing the circuit board |
| PoE LAN port | Power and network connection for PoE configuration |

Communication and terminal configuration varies according to the delivery specifications. Disassembly and reassembly should be performed by trained personnel.

# Front display

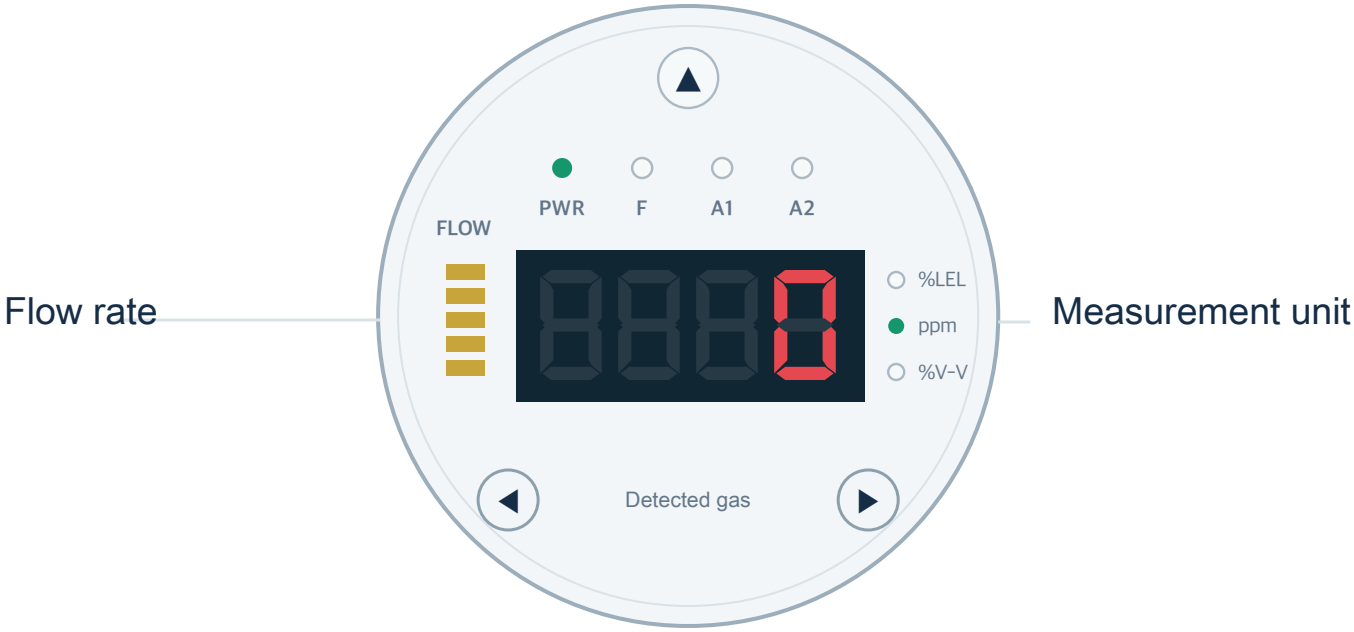


Example of normal detection display

On Off Flashing

| Display | Function |
|---|---|
| PWR / Power | Green indication when normal power supply is established |
| F / Fault | Displays fault if self-diagnosis detects a fault |
| A1 / Stage 1 alarm | Indicates stage 1 alarm setting or alarm status |
| A2 / Stage 2 alarm | Indicates stage 2 alarm setting or alarm status |
| 4-digit LED display | Displays gas concentration, set value, and function code |
| FLOW | Displays current airflow with bar LED |
| Unit lamp | Displays set gas measurement unit |

Operation buttons: ◂ LEFT / ▲ ENT / ▸ RIGHT. Magnetic operation configuration is set using a magnetic probe without opening the cover.

# Installation location and transportation

## Selected based on gas leakage and retention points

Check potential leak points at compressors, valves, reactors, piping joints and gas-filling equipment connections. Also assess places where gas may accumulate, including areas near ignition sources, control rooms and switchgear rooms.

## Consider gas density and airflow

Outdoors, consider wind direction, wind speed, and gas density. Indoors, consider the retention points for gases heavier than air (bottom) and lighter than air (top or around ventilation)

## Environments to avoid installation

Avoid heavy dust or oil mist; direct exposure to corrosive gases or liquids; hot heat sources; high temperature or humidity; condensation; vibration or impact; and strong high-frequency or high-voltage noise.

## Inspection accessibility and receiver location

Follow the delivery drawings for suction and exhaust directions and fixed locations. Install robustly in a location that is easy to inspect and maintain, and place the receiver in a location where the operator can easily check the alarm.

## Transport, Unpacking, and Storage

Avoid impact and dropping; store in a dry, dust-free, and vibration-free environment. After opening, check for any damage, cracks, or component failures. If any abnormalities are found, contact the manufacturer before installation.

# Assembly and Grounding

• Remove foreign matter from the mating surfaces and inspect threads, packing and O-rings for damage. Do not force the parts.

• Use bolts and nuts with materials suited to the environment and sufficient mechanical strength. Securely fasten the cover and joints.

• Connect conductors without twisting or looseness and secure them with appropriate tightening force. Disconnect power before wiring.

## Protective conductor cross-sectional area

| Phase conductor S (mm²) | Minimum protective-conductor area (mm²) |
|---|---|
| S ≤ 16 | S |
| 16 < S ≤ 35 | 16 |
| S > 35 | S / 2 |

Based on the same metal conductor standard. Verify whether the conductor material and installation conditions meet the requirements. The external grounding wire should be selected with a minimum cross-sectional area of 4mm².

Connect internal and external earth points with the supplied grounding lug, spring lock washer and flat washer. Use certified cable glands and sealing fittings suitable for the product's explosion protection. Tighten the sealing ring so that it fits tightly around the cable.

Note: Principle for selecting the same material conductor according to Table 54.2 of IEC 60364-5-54.

# Power and communication configuration

| Composition | Usage Instructions |
| --- | --- |
| 4–20 mA output | Verify the DC 24V power configuration or the PoE power configuration provided. |
| Modbus TCP | Power over Ethernet (PoE) configuration for power and network connection. |
| RS-485 / Relay | Use with products that have this option installed. |

## 24V DC configuration

Verify the V(+), S, and V(-) markings on the terminal block and the supplied wiring diagram. Connect power to V(+) and V(-), and the current signal line to S. Follow the wiring diagram on the next page for signal return and receiver terminal connections.

## PoE configuration

Connect the PoE power and network cable designated for the PoE LAN port. A standard LAN alone will not provide power. Unused conduits should be terminated with a plug suitable for explosion-proof performance, and do not use the rubber cap for transport as the final termination.

## Rated specifications and power supply for nameplate

The "DC 50V or less, 200mA or less" on the physical nameplate indicates the rated limit. This does not mean that you can connect any 50V to the DC power terminals; instead, the actual power supply uses DC 24V or a specified PoE configuration.

# Power and signal connection diagram

## PoE configuration / ASGD-3200

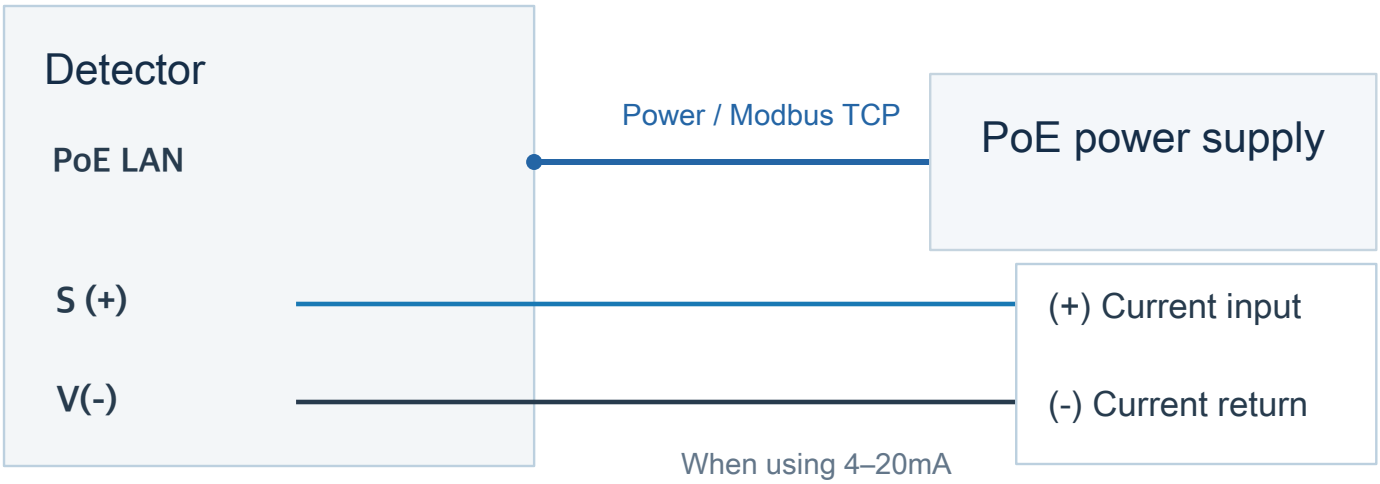


## 24V DC configuration / ASGD-3000

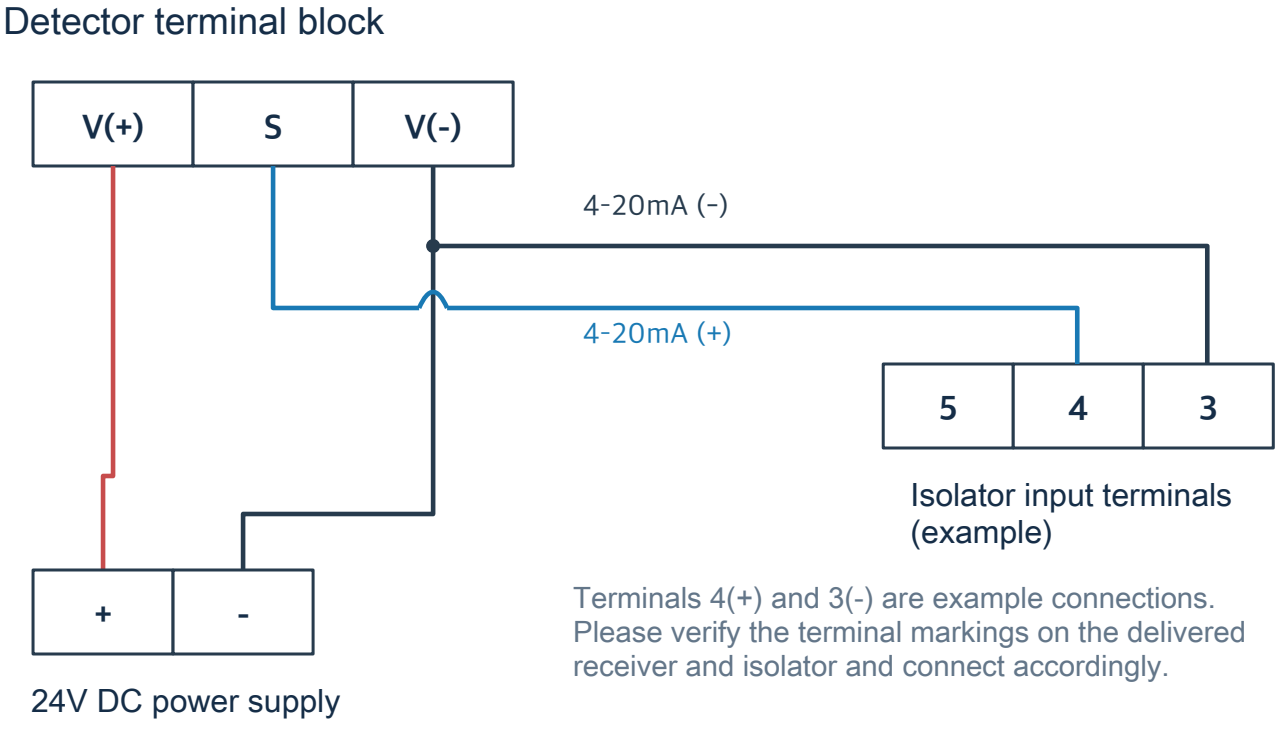

# Dimensions and transmission cable

| Cable cross-sectional area (mm²) | Maximum transmission distance (m) |
|---|---|
| 0.5 | 500 |
| 0.75 | 1,000 |
| 1.0 | 1,500 |
| 1.5 | 2,500 |
| 2.5 | 4,500 |

4–20mA transmission standard. Please verify the actual distance based on power supply voltage drop, total load, and receiver conditions. When using CVVS/CVVSB shielded cable, the transmission distance for RS-485 configuration is 1,000m.

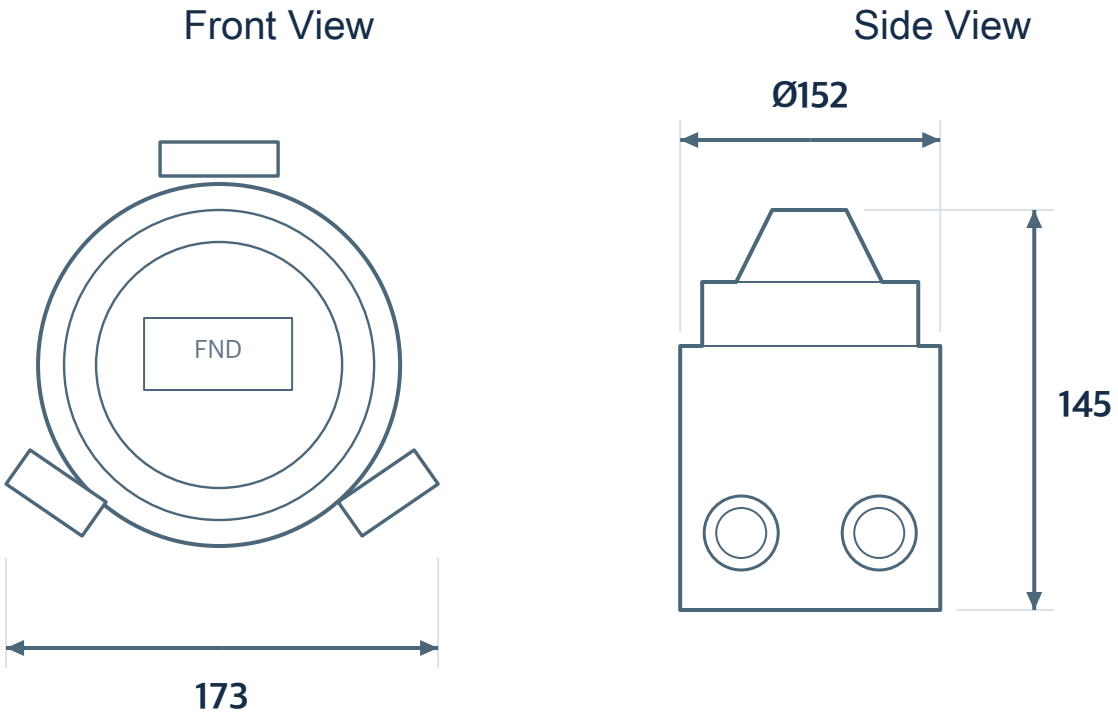


Unit of dimensions: mm

Diagram: 173(W) × 145(H) × 152(D) mm configuration. The existing SP document also includes a 162 × 154 × 140 mm configuration. Please verify the delivery drawing and physical dimensions before installation.

# CAD dimensional drawing

| Original dimension marking | Dimensions / Specifications |
|---|---|
| Appearance | 173 / 145 / Ø152 mm |
| Wiring conduit / Gas port | 2-PF 3/4 / 2-PT 1/4 |
| Installation Hole / Body Height Marking | Ø7 / 140 mm |

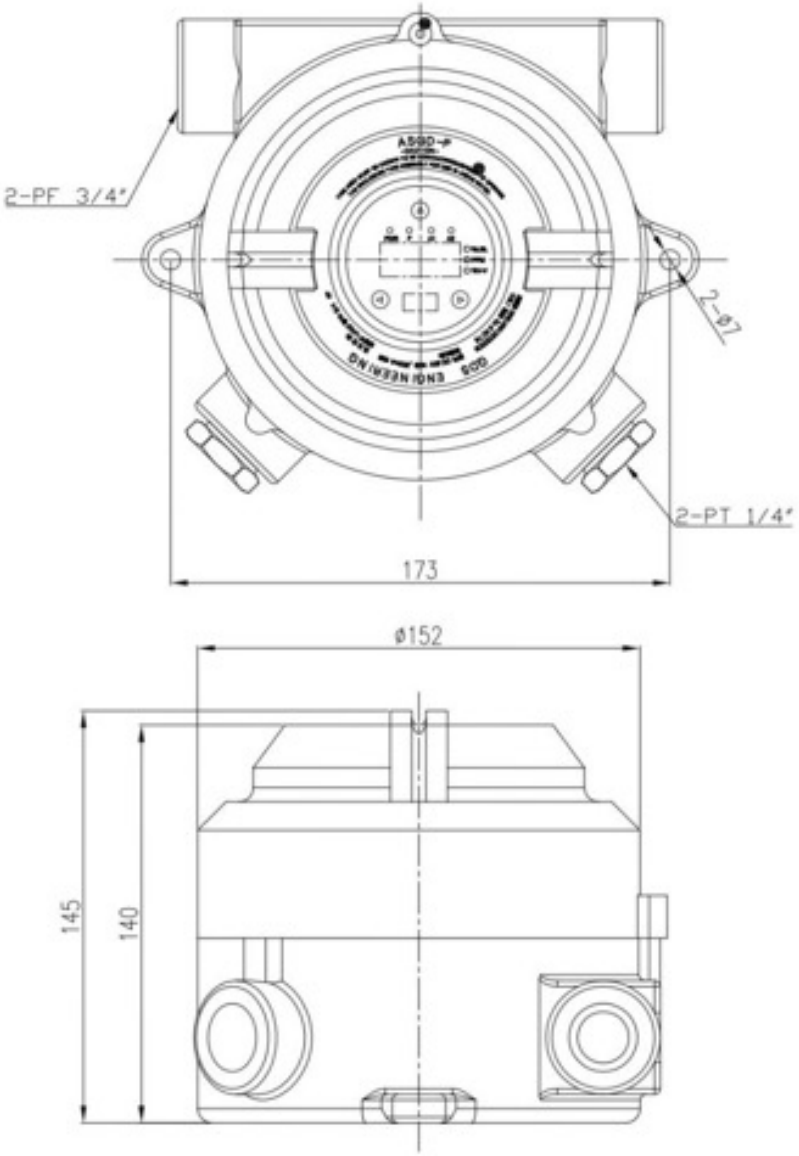


The original CAD drawing is included. This drawing has a 173mm configuration and should not be used in conjunction with the 162mm configuration. Installation machining should be based on the corresponding supplied drawing and actual dimensions.

# CAD Assembly Drawing and Cross-Sectional View

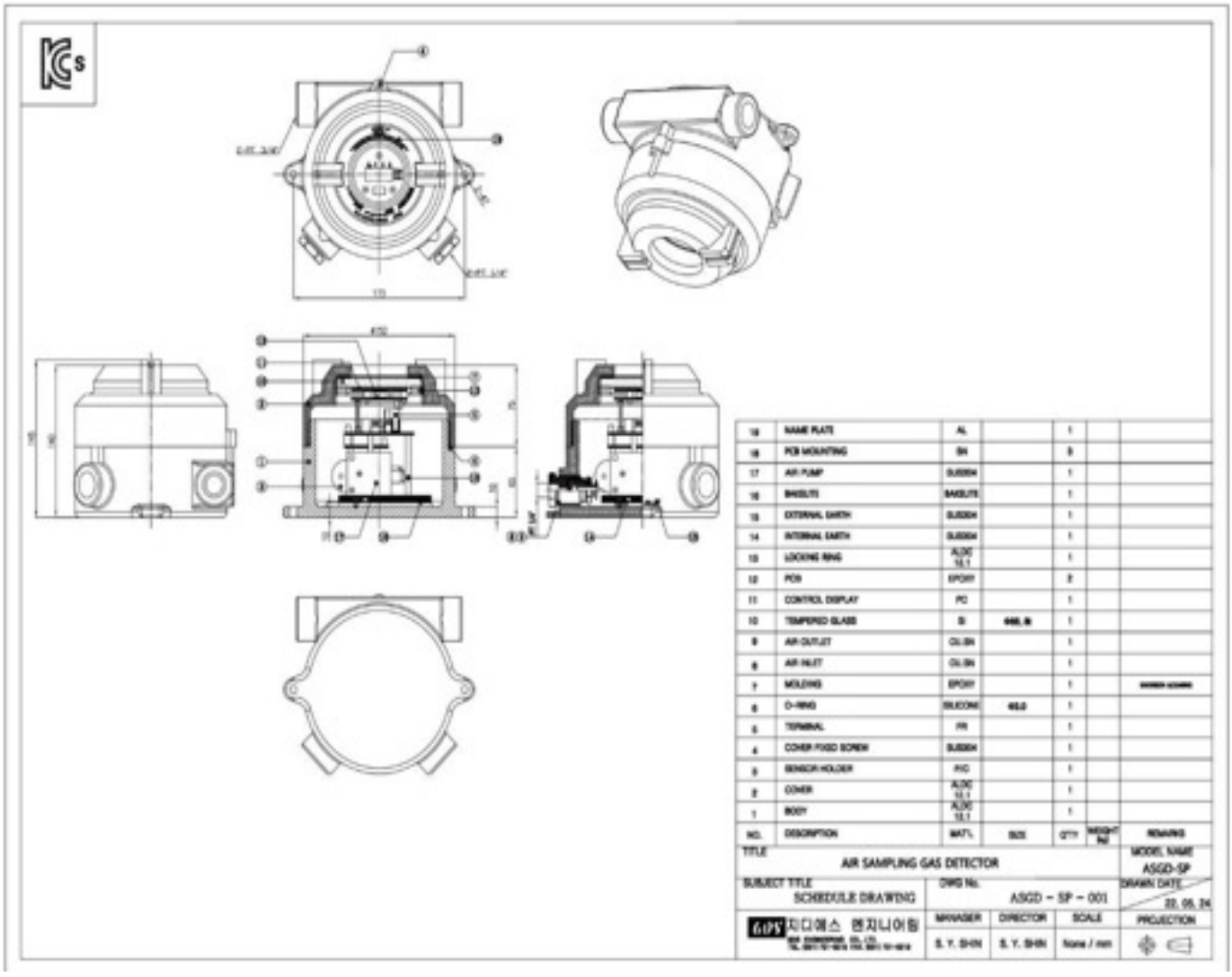


| Drawing Items | Notes |
|---|---|
| Drawing Number / Format | ASGD-SP-001 / ASGD-SP |
| Contents Included | Front, side, rear, isometric and sectional views; component layout |
| Component Description | Please verify with the main components on page 6. |
| Application | For reference of the original structure. Installation and manufacturing should prioritize the approved supplied drawing. |

The lines and dimensions of the original drawing have been maintained. Please refer to the company's drawing original for detailed manufacturing dimensions.

# Power Input and Initial Display

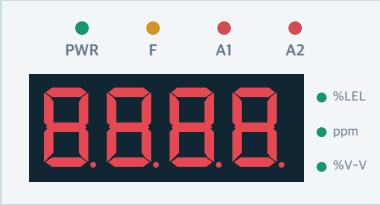


## 1 Check the display unit

When power is applied, the concentration display and status LED will illuminate for approximately 3 seconds.




## 2 Warm-up 180 seconds

The green LED will turn on and the countdown will begin for 180 seconds. During warm-up, the current output is 2mA and the alarm relay will not operate.

## 3 Start detection after verifying the settings

| Display Sequence | Verification Items |
|---|---|
| Software Version | Installed Firmware Version |
| rAn / Measurement Range | Set Full Scale (Display Support Configuration) |
| Address Information | Set Address (Applies only to RS-485 configuration) |
| A1 / A2 | Stage 1 / stage 2 alarm setpoints |
| RELAY 1 / RELAY 2 | Relay Output Type |
| Current Concentration | Normal Monitoring Mode |

The warm-up stage can be terminated using the ENT button. Start actual operation only after the sensor has stabilized. The display order may vary depending on configuration and firmware.

# Detection, Alarm, and Self-Diagnosis

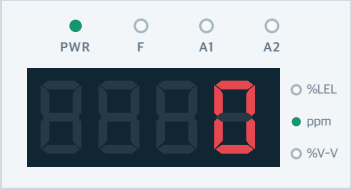


## Normal Detection

The PWR and measurement unit lamps are continuously lit, and the current gas concentration is displayed on the FND.




## Stage 1 / stage 2 alarms

A1 flashes when the stage 1 alarm setpoint is exceeded. When the stage 2 setpoint is exceeded, A1 stays on and A2 flashes.

When the measurement range is exceeded, 22mA is output. For sensor protection configuration, the sensor returns to the detection state after 180 seconds. Do not assume that the gas leak has been resolved solely based on the return indication.

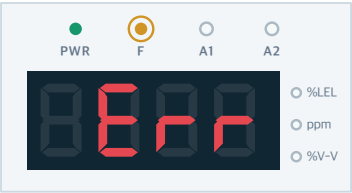


## Fault Indication

On a sensor fault, the F lamp flashes and Err is displayed. When supply voltage is 12V or lower, both power and fault lamps flash.

## Self-Verification (SELF)

During normal detection, press ENT (▲) three times. SELF appears for about 1 second, and all status LEDs and concentration-display segments light for about 1 second. The output is 2mA and the relay does not operate.

# View Settings at a Glance

Operate in the following order: ◂ LEFT, ▲ ENT, ▸ RIGHT in normal detection mode. Move the menu using LEFT and RIGHT in setting mode and select with ENT.

| Display Code | Function |
|---|---|
| 0000 | Zero Calibration (ZERO) |
| SPAn / SPRn | Span Calibration (SPAN) |
| 4-20 | Current Output Test |
| A1 / A2 | Set stage 1 / stage 2 alarm values |
| rEL | Verify relay output setting values |
| S-dt / dAtE | Time/Operating Time menu → page 21 |
| ALAr / CLr | View/Delete Records → Page 21 |
| Adr | Address Configuration (RS-485 Setup) |
| NET / net | Network Settings → Page 22 |
| rES | Reset settings |
| UEr / VEr | Check firmware version |
| OUT | Settings Complete |

The actual display code and supported menus may vary depending on the firmware. If there are no menus, do not apply the procedure. Verify the display code on the screen instead of the number of movements.

# Zero point and standard gas calibration

Before calibration, check for an actual gas leak and prepare the zero gas, standard gas and delivery conditions specified for the sensor. Do not calibrate merely to erase a concentration reading.

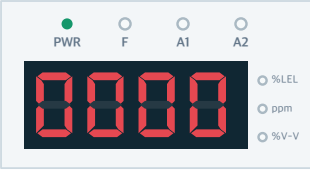


## Zero point calibration

• At 0000, press ENT to view the current concentration. Confirm a stable reading under the zero-gas conditions specified for the sensor.

• Press ENT → select YES → press ENT to execute. Select NO to cancel.

• Success is indicated by 0 or good; failure by Err. After returning to 0000, select OUT and press ENT to resume normal detection.

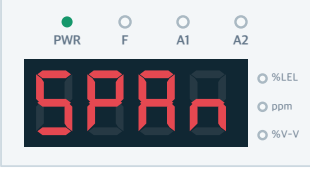


## Standard gas calibration

• At SPAn / SPRn, press ENT. Apply standard gas for approximately 60 seconds or longer, prioritizing the sensor response and a stable reading.

• Enter the standard-gas concentration with LEFT/RIGHT and save with ENT → YES → ENT. Check the success/failure indication and return to the menu.

• After calibration, remove the standard gas and confirm restoration of normal detection, output and alarms. Record gas concentration, calibration results and the next inspection date.

The "Success" indicator varies depending on the firmware, showing values such as 0·YES·good. For sensors such as oxygen sensors, apply the specific calibration procedure for that sensor.

# Output test and alarm setting




## 4–20mA current output test

When 4-20 flashes, press ENT to enter the output test. Check that detector and receiver readings agree at concentration 0/4mA and Full Scale/20mA. Adjust the test value with LEFT/RIGHT. Press ENT to return to the menu, then select OUT → ENT to exit.

Before testing, check the effect on connected equipment. After the test, confirm restoration of normal output and alarms.

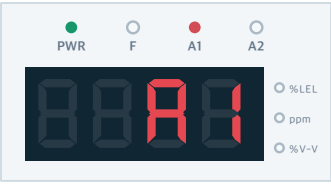


## A1: stage 1 alarm setting

Press ENT in the A1 menu to display the current setting value, and the A1 lamp turns on. Adjust the desired value using LEFT and RIGHT, and press ENT to save.

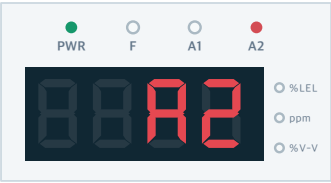


## A2: stage 2 alarm setting

Press ENT in the A2 menu to display the current setting value, and the A2 lamp turns on. Adjust the desired value using LEFT and RIGHT, and press ENT to save.

# Relay, address, and initialization

## rEL Relay setting value verification

Press ENT in the rEL menu to display the current relay setting value. Press ENT again to return to the menu. Output type, pulse width, and contact operation follow the delivery settings. Do not disable any contacts to eliminate alarms.

## Adr Address setting

Used in RS-485 configuration. Press ENT in the Adr menu to verify the current address, and adjust the address using LEFT and RIGHT, and press ENT to save.

## rES Setting initialization

Resetting must be performed by personnel who have confirmed its scope with the manufacturer. Record existing values first: SPAN, alarm, range and 4–20mA settings may be reset. Afterward, complete setup, calibration and functional checks.

## UEr / VEr Version verification

Press ENT in the version menu to verify the current firmware version.

## OUT Setting exit

Press ENT in the OUT menu to return to the normal detection state. If there is no ENT operation in the setting mode for 30 seconds, it will automatically return to the detection state.

# Time, usage time, and record menu

This is an additional function included in the existing SP manual. It is used only in products where the menu is displayed, and instructions for RS-485 configuration are provided for time, usage time, and record deletion from existing data.

| Menu | Function and operation |
|---|---|
| S-dt | Time setting. Press ENT to verify the current value, adjust using LEFT and RIGHT, and save with ENT. |
| dAtE / dATE | Verify and set values related to operating time. Check the current value using ENT. Before changing, verify the meaning, unit, and applicable firmware. |
| ALAr / AlAr | Retrieve records. Access ENT to view stored records. The display format follows the corresponding firmware. |
| CLr | Delete stored records. First, store the necessary records, then verify the deletion range and confirmation status before executing. |

## Order of managing records

When an abnormality occurs, first record the current concentration, flow rate, alarm, and error code and time. After checking ALAr, record the inspection results together, and perform deletion of stored records according to the on-site management procedure.

# Modbus TCP network settings

Apply to configurations that support PoE, Modbus TCP, and NET menus. The following procedure is based on the company's "MODBUS TCP Interface Configuration" materials.

## 1 Move to the NET menu

Select NET / net in the setting mode and press ENT. Use the direction keys to move the items and select/confirm with ENT. Compare the UP/DOWN indicators in the old materials with the direction keys of the corresponding product.

## 2 DHCP automatic configuration

Select "on" in DHCP and save. Apply by pressing OUT → ENT → YES → ENT. After about 10 seconds, confirm the "good" display, and if "err", verify the network connection with the DHCP server.

## 3 IP verification or manual setting

When pressing ENT in the IP menu, 1.xxx, 2.xxx, 3.xxx, and 4.xxx are displayed. For example: 1.192 / 2.168 / 3.0 / 4.55 → 192.168.0.55. Set the manual address to the value specified by the on-site network administrator.

| Item | Setting and confirmation contents |
|---|---|
| IP / SN / GW | IP address / Subnet / Gateway |
| SN example | 24 = 255.255.255.0 |
| PORT | Default port 502 (must match on the receiving side when changing) |

After applying, verify the "good" display and actual communication reception. Do not arbitrarily change MAC-related items. If the menu or storage procedure is different, prioritize the communication materials provided by the supplier.

# Modbus TCP main read addresses

This is the Holding Register address according to the company's existing communication standards. It applies only to the supplied firmware using this address table, and the default communication port is 502.

| Address | Item / Data format |
|---|---|
| 40001 | Status 1: BIT0–3 Operation status, BIT6·7 A1·A2 alarm,<br>BIT8·9 Relay, BIT11 Toggle (2 seconds), BIT12 Range exceed |
| 40002 | Heartbeat: increases every 1 second (0–65535) |
| 40003-40004 | Gas Measurement: 32-bit float / Upper 16 bits → Lower 16 bits |
| 40005 / 40006 | Gas Measurement: 16-bit integer / Error code |
| 40007 | Units and Decimal Places: Decimal places (0–3) in BIT0–2,<br>Units (1=ppm, 4=%Volume, 8=%LEL) in BIT8–11 |
| 40008 | Fault Status: BIT0 E-10, BIT1 E-22,<br>BIT2 E-12, BIT3 E-23 |
| 40011 | Flow Measurement Ratio (0–100%) |
| 40014 / 40016 | Stage 1 / stage 2 alarm setpoints (integer) |
| 40020-40021 | Full Scale: 32-bit float / Upper 16 bits → Lower 16 bits |

## Verify Received Value

The operating status of 40001 is 0=Warm-up, 1=Measurement, 2=Inspection/ Setting. When checking, verify Heartbeat, Error, and Flow together, and compare the screen's concentration, unit, and alarm with the received value.

# Regular inspection

Inspection is performed by a designated person with the approval of the responsible party. Before opening the cover, connecting, or disassembling, disconnect the power. For functional checks during operation, close the cover and perform according to the site's safety procedures.

| Inspection Items | Check Items |
|---|---|
| Case/Cover | Cracks, deformation, and robustness of the installation |
| Joint surfaces and screw threads | Cleanliness, damage, and fastening/loosening status |
| Power and signal lines | Twists, bends, corrosion, slack, and cable damage |
| Cable glands | Attachment and cable sealing status |
| O-rings and packing | Attachment, detachment, wear, and hardening status |
| Fixed components | Cracks in fixed areas and condition of support structure |
| Grounding | Internal/external connections, loosening and rust |
| Sampling system and measurement function | Tube kinking, blockage, leakage, flow rate, output, and alarm |

## Inspection and calibration cycle

The basic inspection and calibration cycle is 6 months. Due to the gas type and usage environment, inspection and calibration within 3 months are recommended, so please consult with the manufacturer to determine the appropriate cycle for the site conditions.

# Confirmation of failure and output status

| Symptoms | Verification and action |
|---|---|
| Display and LED not lit | Verify power supply and wiring. After disconnecting power, check the mounting status of the display module. |
| Err or F lamp flashing | Check the connection status of the sensor. If the problem persists, contact the manufacturer. |
| PWR and F flashing simultaneously | Verify the DC power voltage. The low voltage threshold is 12V or less. |
| Failure of standard gas calibration | Check standard-gas availability, concentration and delivery. Reset only after confirmation by the responsible personnel, then reconfigure and recalibrate. |

## Status according to current output

| Output current | Functional status |
|---|---|
| 0mA | Detector fault |
| 1mA | Sensor failure |
| 2mA | Warm-up / Function setting / Self-verification |
| 4-20mA | Normal detection (monitoring) |
| 22mA | Exceeding measurement range / Overload status |

The current status table applies to 4–20mA configurations. If the problem persists, do not attempt to repair it yourself; contact technical support.

# Troubleshooting Guide by Error Code

The following codes are commonly verified in the company's error code table and the existing Modbus TCP specifications. Apply to configurations that support code display.

| Code | Meaning | Initial Checks |
|---|---|---|
| E-10 | Sensor Malfunction | Check the sensor connection, contact status, sensor lifespan, and any damage. Replacement should be done according to the manufacturer's instructions. |
| E-12 | Power Supply Malfunction | For 24V DC configurations, verify the input voltage and wiring. For PoE configurations, verify the power supply and LAN connection. |
| E-22 | Exceeding Measurement Range | First, verify whether there is actual gas leakage. If there is no leakage but the problem persists, request a sensor and circuit check. |
| E-23 | Flow Measurement Malfunction | Check for obstructions, kinks, and leaks in the suction and discharge tubes, as well as the flow rate. Request repair for pump and drive circuit malfunctions. |

## Verification After Action

After taking action, verify that the concentration, flow rate, and status display, as well as the receiver's alarm and communication, are normal. Simply turning off the error display does not complete the normal recovery.

# Nameplate and Markings




| Items to be Displayed | Contents of Nameplate |
|---|---|
| Model / Explosion-Proof Rating | ASGD-SP / Ex db IIC T6 Gb |
| Rated Limit | ≤ 50V DC / ≤ 200mA |
| Wiring entry | 3/4 PF |
| Certificate number / serial number | Compare the actual product nameplate and certificate |

ASGD stands for Auto Sampling Gas Detector; the safety-certified type designation is ASGD-SP. Verify the certificate number and serial number on the nameplate and the certificate's special conditions of use.

# Maintenance, Training, and Warranty

## Component Replacement and Assembly

If the O-ring or packing is worn or hardened, replace it with a component of the same specification. For any abnormalities in the explosion-proof joints, such as detachment or damage to the screw thread, please take action according to the manufacturer's instructions. Securely tighten any loose connections and grounding parts.

## Grounding Parts and Installation Status

If the grounding connection parts, such as the lug, spring washer, and flat washer, are damaged or deformed, replace them with the same part. Please check the installation status to ensure that the product does not fall from the installation location.

## User Training

On delivery or installation, designate personnel to receive training in inspection, maintenance, work precautions, troubleshooting, and safe installation and use.

## Installation Standards

For explosion-proof related work, please verify and perform according to the certification conditions and applicable standards such as KS C IEC 60079-14 of the product. Please comply with the on-site safety procedures and work permit system.

## Product Warranty

The warranty period is 1 year. The warranty does not cover the effects of the usage environment due to prolonged high humidity, continuous detection of high concentrations, or corrosive gases. Please refer to the delivery contract and manufacturer's instructions for detailed conditions.

# On-site Verification Record

| Basic Information | Record |
|---|---|
| Installation Site / Location | |
| Model / serial number / firmware | |
| Gas Detected / Measurement Range | |
| Power / Communication / IP Port | |
| Inspection Date / Responsible Person | |

## Pre-Operation Check

| Verification Items | Result / Notes |
|---|---|
| Nameplate, Gas Detected, Measurement Range, Power Configuration Match | |
| Case, cover, cable gland and grounding fasteners | |
| Connection and indication of suction/discharge piping and flow rate | |
| Concentration, unit, and status display after warm-up is complete | |
| 4-20mA or communication reception status | |
| Setting of A1 and A2 and alarm operation | |
| Calibration completion date and next inspection date | |

Record changes to settings and calibration results in on-site management records.

ASGD-SP

# Technical support and service

Inquiries regarding installation, setup, calibration, and maintenance


GDS ENG Co., Ltd.

031-731-0218

gdseng@gdseng.co.kr

gdseng.co.kr

Room 605, Bldg. B, Ssangyong IT Twin Tower
531 Dunchon-daero, Jungwon-gu, Seongnam-si, Gyeonggi-do, Republic of Korea


When contacting support, provide the model, serial number, symptoms and displayed code.


ASGD-SP User Manual

2026.11 · Rev.4