GDS ENGINEERING

2026 / TECHNICAL MANUAL

GD2020

Instructions for use of diffusion type gas detector

Installation, wiring, operation, calibration, and maintenance instructions



2026.11 Consolidated Revision · 2026.11.02

Before use, please verify the delivered model, detected gas, measurement range, and options.

gdseng.co.kr 031-731-0218

Things to check before use

This document is intended for personnel responsible for installation, operation, and maintenance. Please refer to the physical nameplate, the delivery specification, and the wiring diagram.

01 Pre-work safety measures

Installation, wiring and disassembly must be performed by trained personnel. Disconnect power before work. Inform the relevant personnel before calibration or output testing and manage interlocked equipment according to site procedures.

02 When an alarm is triggered

According to the on-site emergency procedures, identify the source of the leak and protect personnel. Do not disable the alarm or adjust the zero point to hide the actual gas concentration.

03 Post-test recovery

Remove calibration gas and test equipment. Confirm that normal detection, current output, communication and interlocked equipment have been restored. Record changed settings and inspection results.

> Do not open the cover while energized or when an explosive gas atmosphere may be present. Before installation, verify the hazardous-area classification, gas group, temperature class, ambient temperature and product certification conditions.

The menu and display examples in the manual may vary depending on the firmware. If the screen or terminal markings are different, do not arbitrarily match them; instead, verify the product number and PCB version.

Product Composition and Application Scope

This is a field-mounted detector that allows natural diffusion of gas around the sensor. Check the concentration and status on the 4-digit display and transmit the output signal to the receiving equipment.

The target gas, measurement range, units, and sensor type are specified in the delivery specifications. Even with the same appearance, different sensors will detect different target gases. One product does not detect all gases simultaneously.

Composition	Role
Case/Cover	Protect sensors and circuitry from the external environment.
Sensor / Holder	Detection and signal generation for the specified gas
Display / Control Panel	View concentration, status and settings; operate the controls
Terminal Block / Circuit	Connection for power, current, communication, and relay.

Main Specifications

Item	Specifications / Application Conditions
Power	DC 24V / 0.15A
Output	4-20mA / Maximum load 500Ω RS-485 applies only to the corresponding option configuration
Measurement Range / Unit	Supplied range for each gas to be detected / %LEL, ppm, %V/V, etc.
Accuracy	Accuracy ±3% F.S. / Zero point deviation ±3% F.S.
Relay	DC 24V, 1A (optional)
Installation Method	Wall mounting / Verify supplied bracket and drawings.
Appearance	110(W) × 150(H) × 81(D)mm
Weight	1.5kg
Wiring entry	Verify actual screw and gland specifications. Refer to drawings and nameplates first.

Explosion-proof markings should be applied based on the product's nameplate and certificate. While "Ex d IIC T6" or "Ex db IIC T6 Gb" may be indicated in the original, verify whether it applies at the time of shipment and for the specific model.

The general operating temperature in the original document may differ from the certified ambient temperature in the Safety Manual. Operating temperature and humidity must meet both sensor specifications and the certification conditions of the delivered product.

Installation and piping

Installation location

Choose the location according to potential leak points, gas density, wind and ventilation flow, and places where gas may accumulate. Ensure maintenance access. Avoid vibration, impact, high-frequency noise, dust, oil mist, condensation and direct liquid ingress.

Sensor and fixing

Expose the sensor to the sample air without blocking its protective filter. Secure it with bolts and nuts suitable for the site. Follow the supplied outline drawing for detector and sensor orientation.

Transportation and assembly

Avoid impact and dropping; store in a dry place. After opening, check for cracks, damage, and missing parts. Remove any foreign matter from the mating surfaces, and check the condition of the screw threads, packing, and O-ring before assembly.

> Use components that match the explosion-proof certification and screw specifications for cable glands, sealing fittings, and unused wiring entries. Do not mix PF, NPT, and metric screws. Do not perform any machining, painting, or repair on explosion-proof mating surfaces.

Power and signal wiring

Terminals	Display	Function
1	V+	DC 24V Positive
2	S	4-20mA Signal
3	V-	DC power negative / signal common wire
4	Unused	Do not connect arbitrarily
5 / 6	DA / DB	RS-485 + / - (optional)

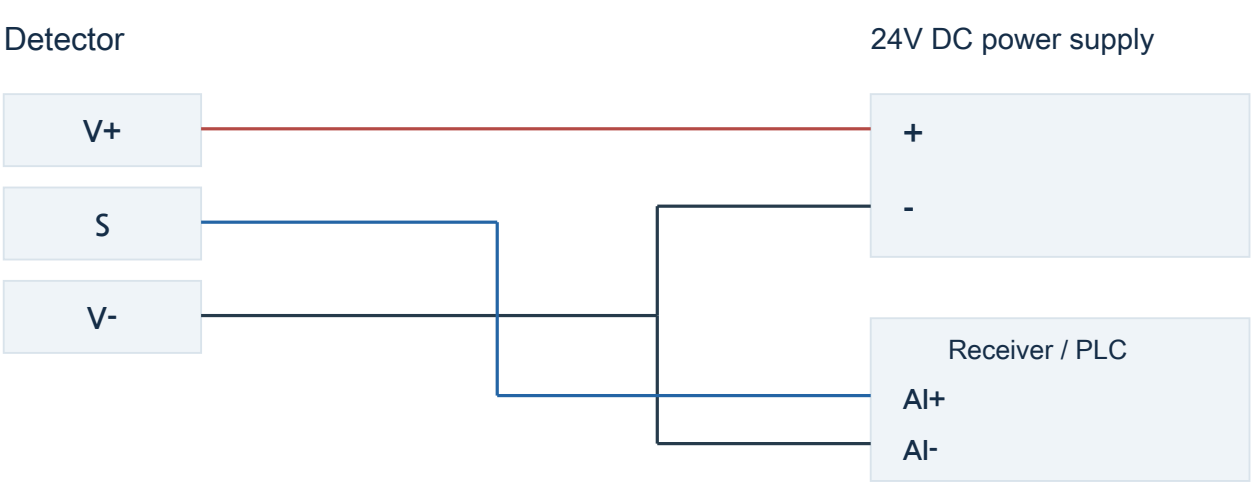

The diagram above shows a basic connection example for a 3-wire current output. The wiring on the receiver side may vary depending on whether active or passive inputs and an isolator are used, so refer to the delivery wiring diagram first.

Relay configuration: Verify the C and NO/NC terminals of A1 and A2. The jumper on the original PCB is NO when 1-2 is connected, and NC when 2-3 is connected. Do not apply the same number to other PCBs in the same location.

External dimension drawing

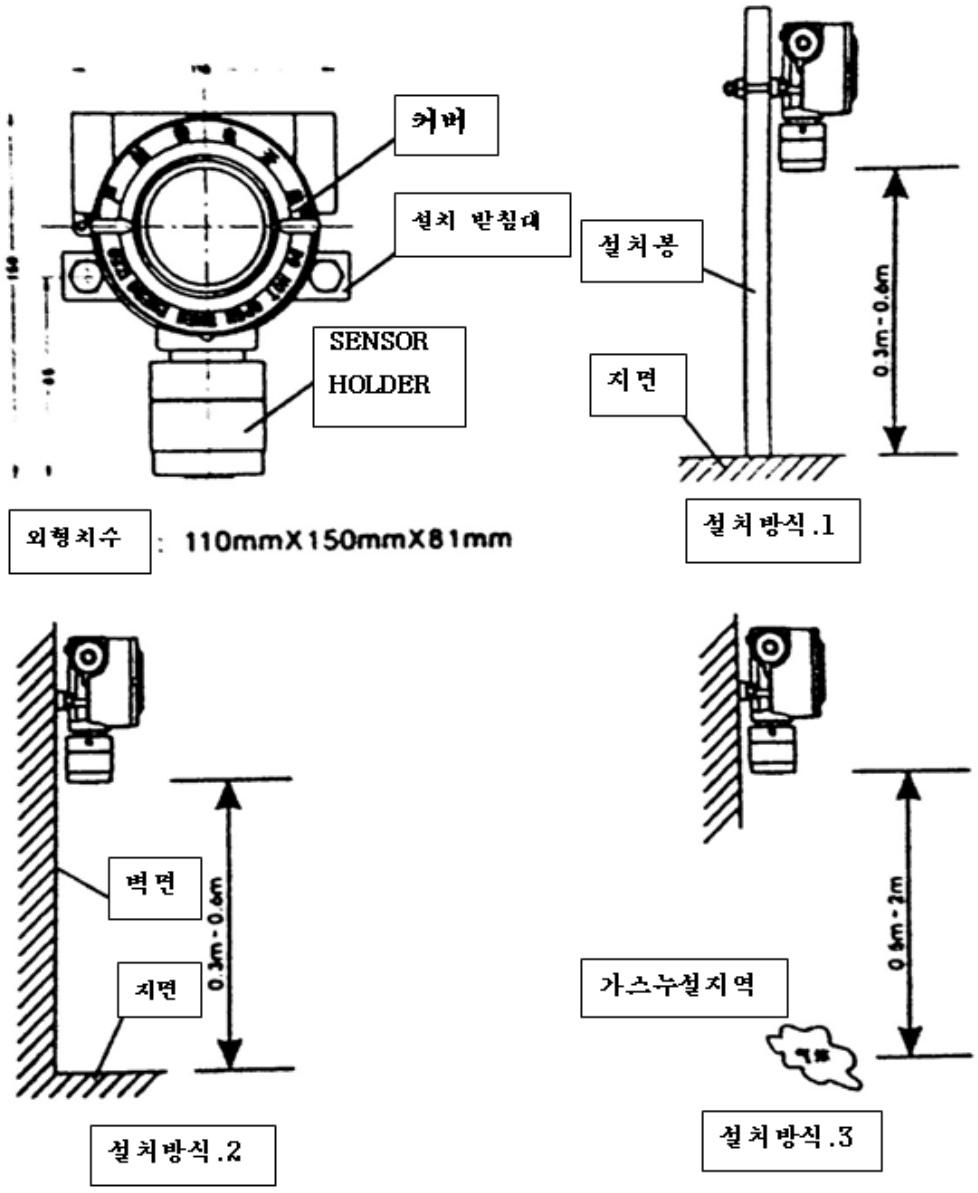

Original external drawing. Units: mm. Verify that the equipment configuration and dimensions supplied before machining and installation match.

Standard	Verification content
External dimension	110(W) × 150(H) × 81(D)mm
Application	Check cable entries, protrusions, mounting holes and maintenance clearance

Assembly and sectional drawings

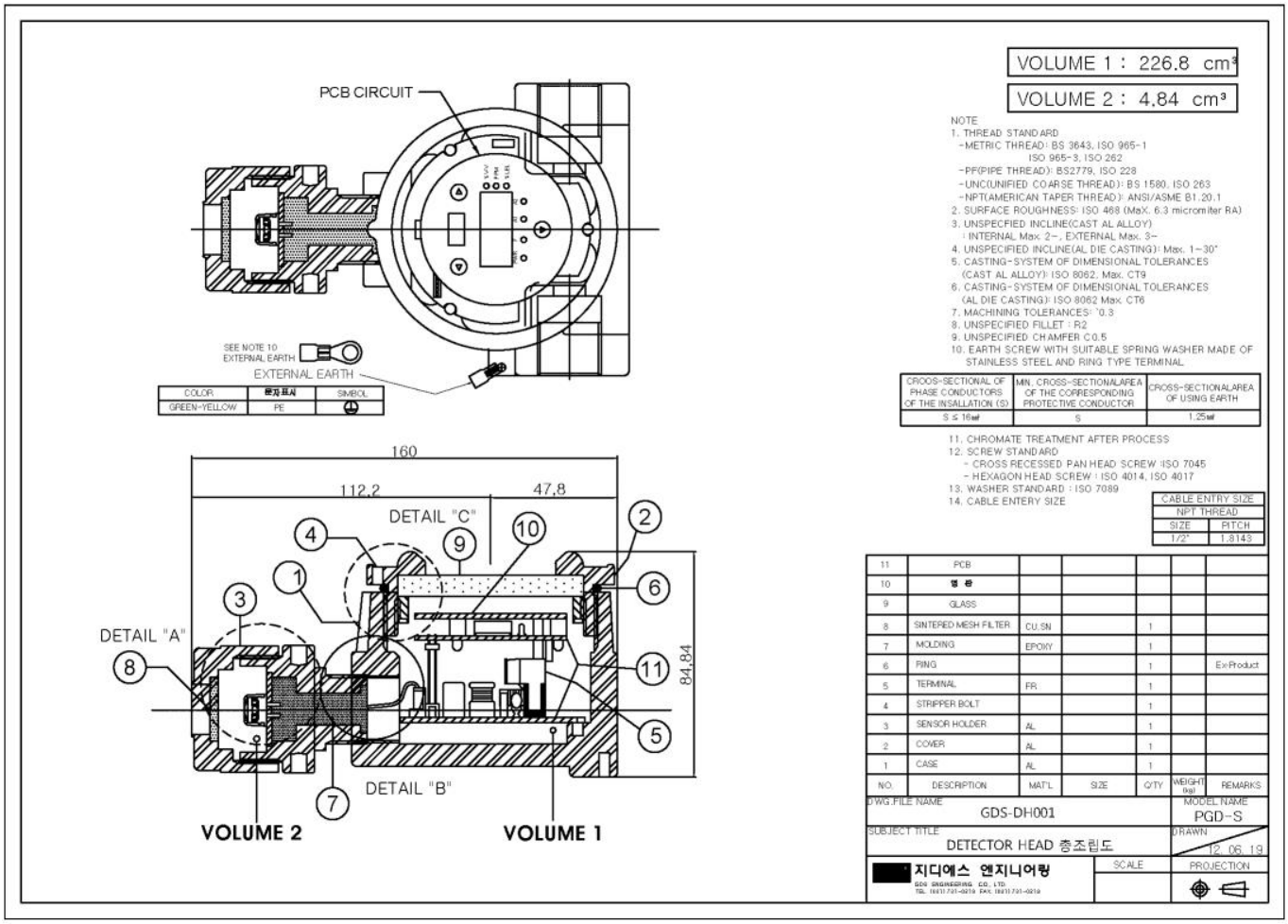

Assembly diagram / cross-section diagram from the company's original. This is for verifying shape and component arrangement, and does not replace manufacturing and machining drawings.

If the model name on the original drawing and the actual delivered model are different, do not assume that they have the same structure. Disassembly and replacement of sensors, pumps, PCBs, and reinforced glass and joints must be done according to the approved parts and maintenance procedures for each product.

Grounding and cable selection

Connect the wires without twisting, loosening, or corrosion, and follow the fastening conditions of the terminal and gland manufacturers. Connect the internal and external ground points using the lugs, washers, and anti-loosening washers provided with the product.

Phase-conductor area S (mm²)	Minimum protective-conductor area (mm²)
$S \leq 16$	S
$16 < S \leq 35$	16
$S > 35$	S / 2

Refer to the selection based on the same metal conductor. The external ground wire should be applied with a minimum of 4mm² or more, according to the original guidelines, and also verify the on-site electrical design conditions.

Conductor cross-sectional area (mm²)	Refer to the original transmission distance (m)
0.5	500
0.75	1,000
1.0	1,500
1.5	2,500
2.5	4,500

> The transmission distances are reference values from the original document. Determine the actual length from supply voltage drop, current consumption, cable resistance, maximum load, noise and receiver requirements. The distances in the table alone do not guarantee correct operation.

Power-up and normal operation

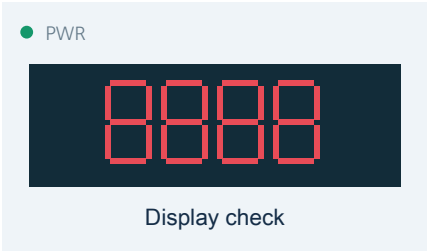

Display check

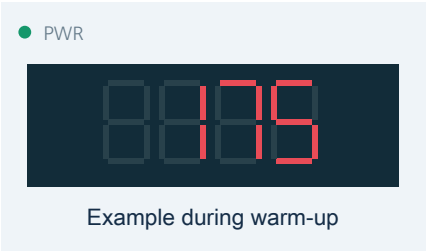

Example during warm-up



Example of normal display

01 Display check

When power is applied, the concentration display and status LED illuminate for approximately 3 seconds. Check the LED and numerical display and power status.

02 Warm-up for 180 seconds

The power LED turns on, and a countdown of 180 seconds begins. During warm-up, the current output is 2mA, and the alarm relay does not operate. Start operation after the product and sensor are stable.

03 Check settings

After checking the software version, address (supported configuration), measurement range, A1 and A2 settings, and relay settings, enter normal detection status. The display order may vary depending on the firmware.

Self-check

When the ENT button is pressed three times in the normal state, the SELF indicator appears, and the display and status LED illuminate for approximately 1 second. At this time, the output is 2mA, and the relay does not operate.

> A warm-up skip button, where supported, does not replace sensor stabilization. Normal concentration depends on the target gas; the normal ambient reading of an oxygen detector is not 0.

Alarm and output signal

Output current	Status / Check items
0mA	Check for detector failure or power/wiring problems
1mA	Sensor failure signal: Supported in the corresponding firmware
2mA	Warm-up or function setting/check status
4-20mA	Normal measurement signal: Proportional to the set measurement range
22mA	Overrange or protection status: Prioritize checking for gas leakage

Status LED

Display	Meaning
PWR	Normal Power: Green Indicator
F / Err	Fault Condition. Sensor, Input Signal, and Power Check
A1	Stage 1 alarm
A2	Stage 2 alarm. In high-alarm configurations, A1 is lit and A2 flashes.
Unit LED	Displays set %LEL, ppm, or %V/V

The over-range protection time specified in the original document is approximately 180 seconds. Deactivating or restoring the display does not indicate leak mitigation. For lower limit alarms, such as oxygen deficiency alarms, please verify the delivered settings and operating direction.

Zero Point and Standard Gas Calibration

Before calibration, verify the gas, range, unit, valid standard gas, adjusted flow rate, and pipe condition. During operation where normal detection is not guaranteed, ensure alternative monitoring according to the on-site procedures.

ZERO / Zero Point

01 Stabilize in the specified zero gas

Wait for the value to stabilize in the zero point condition without the target gas. Do not adjust the zero point if there is suspicion of a leak. The zero point for the oxygen sensor must be set according to the sensor's separate procedure.

02 Entering the 0000 Menu

From the normal screen, operate LEFT, ENT, and RIGHT sequentially. When 0000 flashes, press ENT to check the current concentration, then press ENT again.

03 Save and Exit

Select YES with LEFT/RIGHT and press ENT to save. Verify the 0 or good display. If Err, check the calibration conditions. Select OUT with LEFT in 0000 and exit with ENT.

SPAN / Sensitivity

Press ENT at SPAn (e.g., SPRn). Supply the specified standard gas for at least the original minimum of 60 seconds and confirm a stable reading. Use LEFT/RIGHT to enter the concentration stated on the standard-gas certificate, then save in this order: ENT, YES, ENT.

> After calibration, remove the standard gas and verify normal detection and receiving values. If Err occurs, check the remaining gas, expiration date, pipe, and flow rate, and sensor status. rES initialization is not a common solution for calibration failure.

Alarm Setting and Current Output Test

01 A1 / A2 Verification and Setting

Select A1 or A2 in the setup mode and press ENT to verify the current value. Enter the approved alarm value using LEFT/RIGHT and save it by pressing ENT. When only retrieving values, do not modify them and exit.

> Set the alarm criteria based on the target gas, measurement range, and site-specific safety standards. Do not use the numbers or other site settings shown in the manual as common default values.

4-20mA output test

02 Enter test mode

Press ENT in the 4-20 menu to output 4mA, which corresponds to a concentration of 0. Changing the display value with LEFT/RIGHT also changes the current, and the maximum value within the set range outputs 20mA.

03 Verify and restore received values

Check that the receiver and PLC correctly convert the test current. Press ENT to return to the menu, then select OUT and press ENT to return to normal detection. Restore interlocks, alarms and communication, and record the results.

rEL / Relay output

Check the settings and operating table for the specified relay. The original document includes examples of continuous output and maximum 30-second pulse output, but the meaning of the menu code depends on the firmware. After checking the load rating and NO/NC operating direction, perform the test.

The current-output test checks the receiving signal path. Perform it separately from an actual gas-response test of the sensor.

Additional menu and setting management

Menu	Function and scope
Adr	RS-485 address: check the current setting and assign a unique address for the applicable configuration.
UEr / V100	Check the installed firmware version. Record the value displayed on the screen.
OUT	Exit with ENT. The original firmware returns to monitoring after about 30 seconds without input.

Troubleshooting and maintenance

Symptoms	Verification sequence
Screen and LED not lit	Rated power, polarity, wiring, voltage drop, and display connection status
Err or F Flashing	Sensor, connecting cable, input signal, and power supply. Record fault code.
Calibration failure	Standard gas type, concentration, expiration date, remaining quantity, flow rate, leakage, sensor lifespan.
Mismatch of received value	Range and unit of detector and receiver, current loop, common line, maximum load.
Alarm continues	Actual gas concentration, alarm setpoints, sensor status and interlock operation

Regular inspection

Check normal display, alarm, current-output and communication operation. Inspect mounting, power terminals, grounding, cables and glands for loosening, corrosion or damage. Set a calibration schedule suited to the sensor, gas and site conditions, and record the results.

The original guidance specifies 6-month inspection and calibration, with quarterly inspection depending on the gas. Apply the stricter of the manufacturer's interval specified at delivery and the site requirements. Perform additional checks after abnormal exposure or sensor replacement.

> If you find cracks in the case, damage to explosion-proof joints and screw threads, or hardening of O-rings and packing, please contact the manufacturer. Use approved identical parts and do not repair any parts that affect explosion-proof performance.

Operation record and technical support

Record items	Site record
Installation location / product number	
Detected gas / range / unit	
Power / communication / PCB, firmware	
A1 / A2 / Relay setting	
Zero point / standard gas concentration, expiration date	
Current, communication, and alarm test results	
Calibration Date / Next Inspection Date / Responsible Person	

Technical Support

GDS ENG Co., Ltd.
031-731-0218 · gdseng@gdseng.co.kr
Room 605, Bldg. B, Ssangyong IT Twin Tower, 531 Dunchon-daero, Jungwon-gu, Seongnam-si, Gyeonggi-do, Republic of Korea

Refer to the delivery contract for warranty and paid-repair conditions. The original guidance states a 1-year warranty. Damage caused by operating conditions such as sustained high gas concentrations, corrosive gases or excessive moisture is assessed separately.

Basis for revision: GDSENG_GD2020 Manual and GD-2020S 4-20mA output test data
Revision date: 2026.11.02.